LACAVA

CIGNO
wall-mount single-lever faucet
1514S/1514L

Specifications:

Installation:	wall mount, single lever
Exterior Dimensions:	H: 3 3/8” SPOUT: 6 1/8” (1514S) or 9” (1514L)
Material:	solid brass construction
Water use:	1.2 GPM
Pop-up:	yes
Finishes:	CR - polished chrome PN - polished nickel NI - brushed nickel BG - brushed gold 44 - matte black
Cutout Size:	Ø 1 3/4” handle, Ø 1 3/4” spout
Accessories included:	European click-clack drain # 7100-16OF
Fittings included:	Rough-in # 1514-ROUGH and trim # 1514S-A or 1514L-A

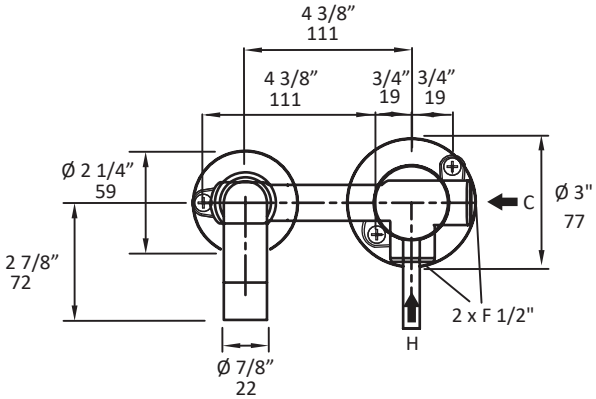

Features:

- 1514S - 6” spout
- 1514L - 9” spout
- ceramic disk cartridge
- complements the Cigno Collection
- NO EXTENSIONS AVAILABLE

Codes + Standards:

- Meets and exceeds applicable national codes and standards
- CAL-Green compliant

ADA compliant when installed to specific requirements of this regulation

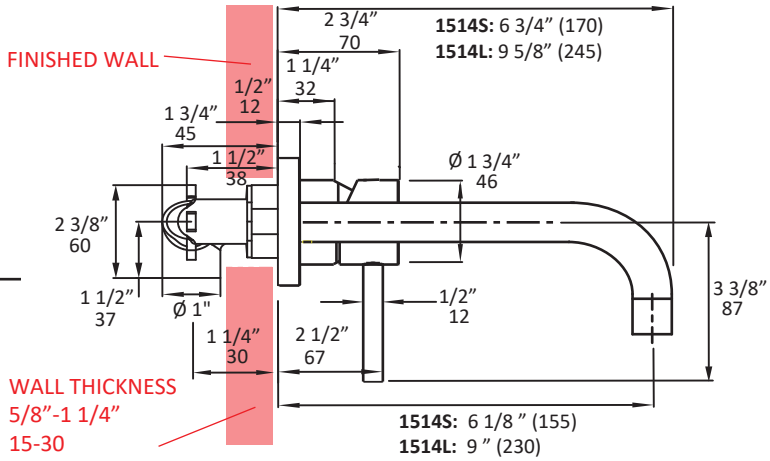

Recommended Items:

- Replacement parts:
  - R054 replacement ceramic disc cartridge
  - R1514-AER replacement aerator
- European drain with overflow
  - 7100-16OF click-clack drain
  - 7100-13OF grid drain
  - 7100-12 pop-up drain

LACAVA reserves the right to revise any dimension or information on this sheet without notice. Dimensions are nominal and may vary within an industry accepted tolerance of 1/4”. Drawings provided herein are meant to give the user an idea of the product and are not made to scale. Location of plumbing is meant for reference, your specific application may vary.

Revised: 05/05/2021