Brass Traditions™

Distinctive Solid Brass
and Copper Lighting Fixtures
Handcrafted by Malco, Inc.

Item: 1151 Flush Mount Lantern

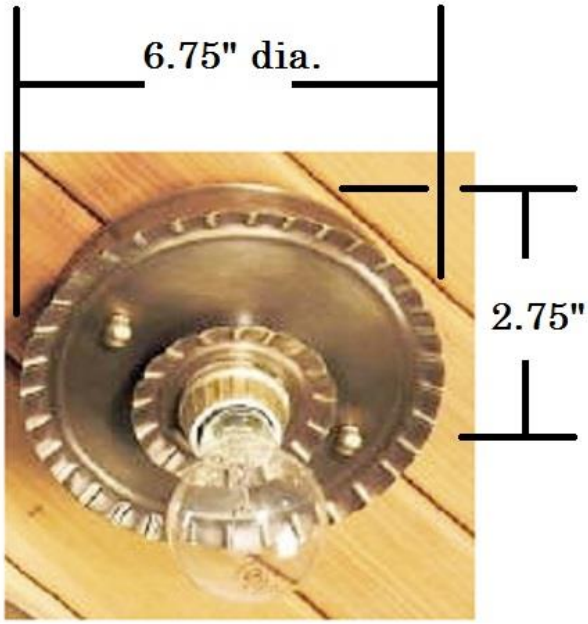

Shown in our Antique Brass finish

60 W Max Edison base

Limited Lifetime Warranty, Damp Rated
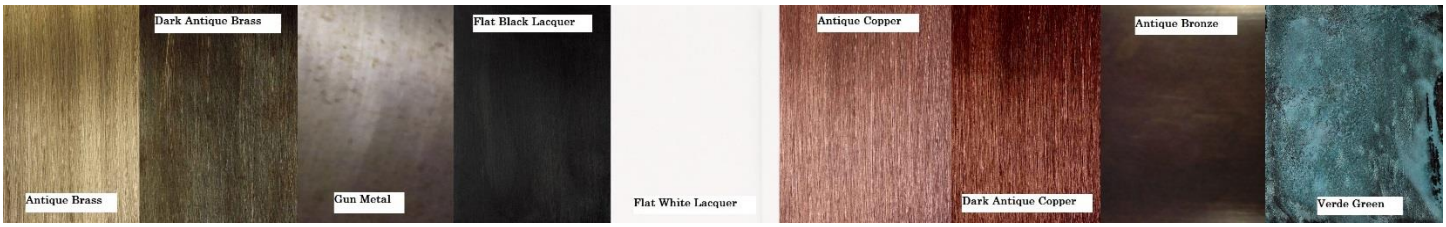
Options: Any of the finishes below